Whacker Technologies - W8 LED Light Head

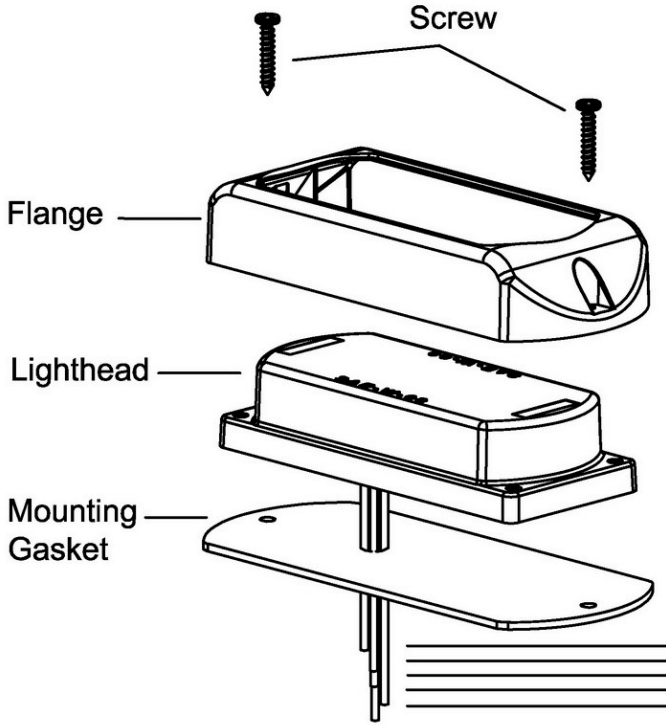

RED: To +VDC (fuse @ 3A)

BLACK: To Chasis Ground

BLUE: Patterns:
To select Flash Pattern, apply BLUE to BLACK wire:
-Less than 1 second for next pattern
-About 3-5 seconds for steadyburn
-More than 5 seconds to turn off

WHITE: For high/low Power
-High Power - not connected to BLACK wire
-Low Power - connected to BLACK wire

YELLOW: For Synchronization
-Connect YELLOW wires of all heads together for synchronization
(not all patterns can synchronize)